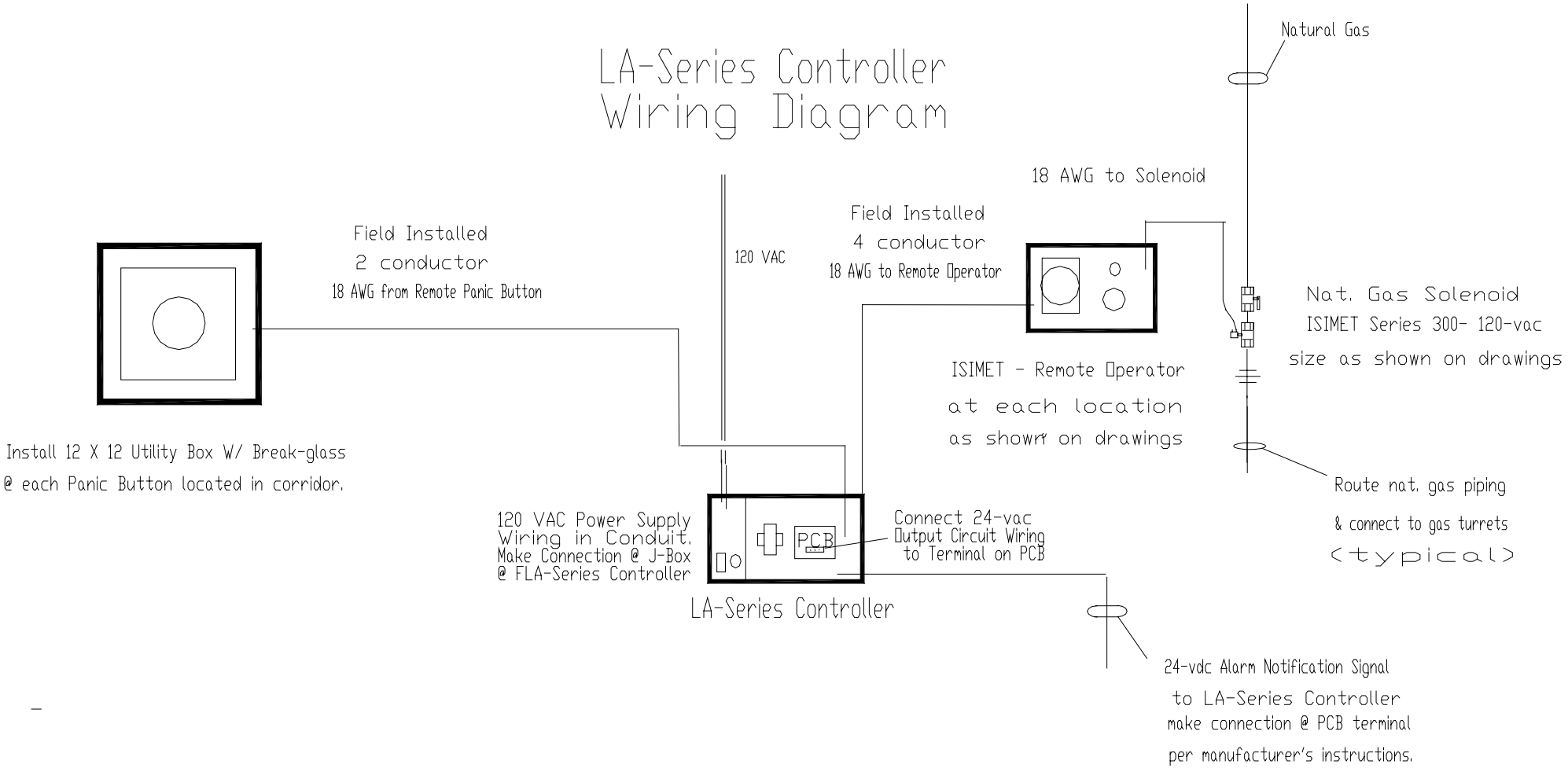LA-Series Controller Wiring Diagram